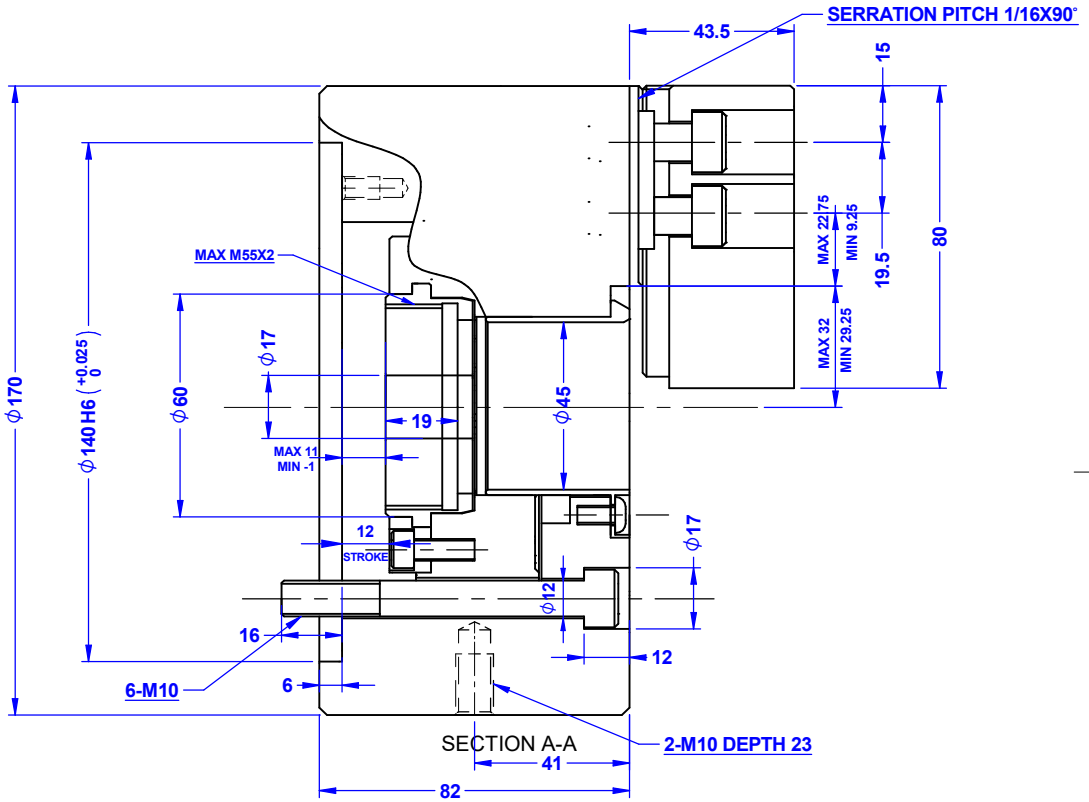

SECTION A-A

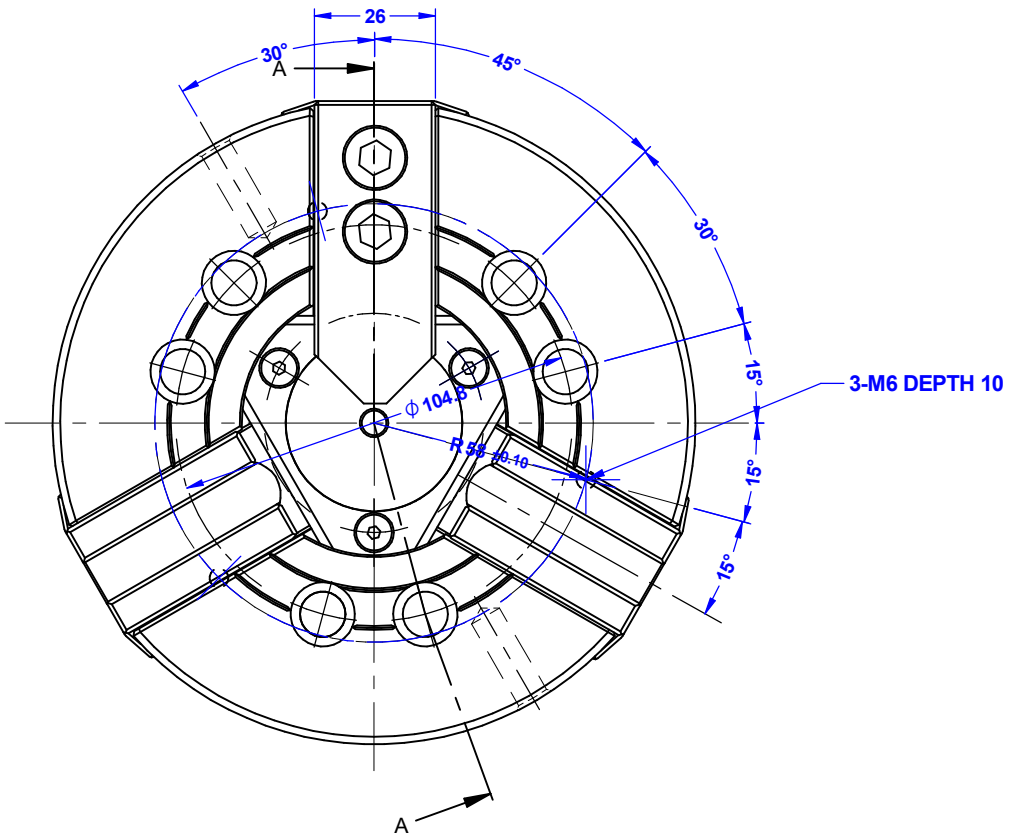

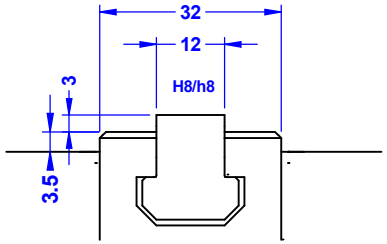

DETAIL B

SPECS : WITH STD SOFT BLANK TOP JAWS AT MAX PERMISSIBLE INPUT FORCE MAX. STATIC GRIPPING FORCE AND MAX. PERMISSIBLE SPEED ARE ACTUAL VALUE AT 1/2 HEIGHT OF STD SOFT BLANK TOP JAWS FROM CHUCK SURFACE.

SPECIFICATIONS	PLUNGER STROKE	JAW STROKE (IN DIA)	MAX. PERMISSIBLE INPUT FORCE	MAX. STATIC GRIPPING FORCE	MAX. PERMISSIBLE SPEED	MASS	MOMENT OF INERTIA	DYNAMIC GRIPPING FORCE AT MAX. SPEED
	12 mm	5.5 mm	22 Kn 2243 kgf	57 Kn 5812 kgf	6000 min-1	13.9 kg	0.058 Kg.m2	19 Kn 1937 kgf

POSITIVE Work Holdings @ its Best !!!

KIRAN INDUSTRIES
MUMBAI, INDIA.

WEIGHT 13.99 kg	TYPE	HTW - 3170-I
	NAME	POWER CHUCK
3RD ANGLE		HTW-3170-I
	DRAWING NO.	PC 170 2023